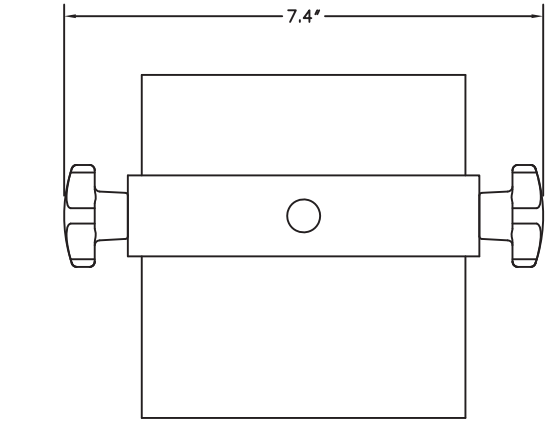

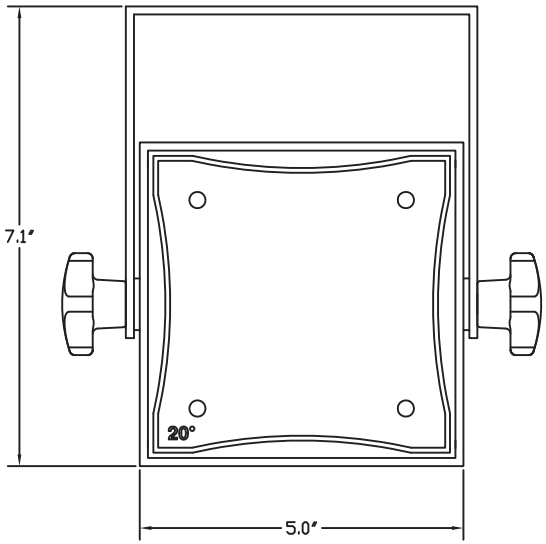

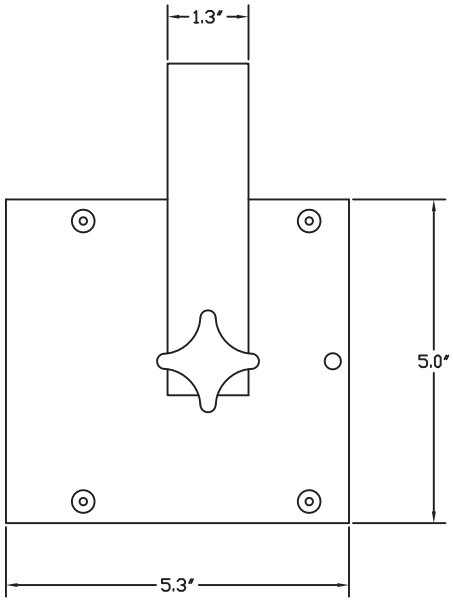

DISCRIPTION	BY	DATE	REV
–	–	–	F
–	–	–	E
–	–	–	D
–	–	–	C
–	–	–	B
–	–	–	A

Revision records

Designed:	Checked:	Date:	Scale:	Sheet:
MB		07/09/14	N/A	1 OF 1

BRAQ CUBE SERIES

ROSCO
DESIGNED BY THE BLACK TANK

BRAQ CUBE PROFILE